The Ford Model A Wiring Diagram: Time for an Update?

by OVRMAFC Member Butch Schultz

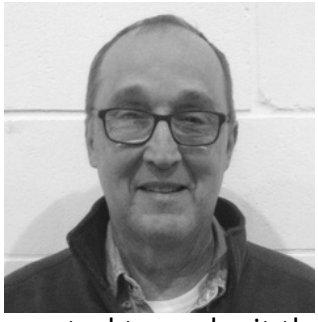

Veteran Model A owners may not learn much from an updated wiring diagram, but it can still help when questions pop up. For newer enthusiasts, though, a clear, modern wiring diagram can make the hobby far less intimidating and much more enjoyable!

Several years ago, I purchased my first Model A, a 1930 Town Sedan. It's a solid car with good bones, but like anyone new to the hobby, I wanted to make it the best it could be. I began with the basics: fluid changes, new spark plugs, a new distributor and a rebuilt carburetor. Then I turned my attention to the wiring, which appeared to be original. Lamp circuits and switches were broken, wires were frayed and exposed, and the color markings had faded. The ignition switch worked for a short time—and then it broke. I didn't trust any of it. So, despite never having rewired a car before, I decided to start from scratch. At the very least, I'd gain a deeper understanding of the car and eliminate the risk of future short circuits.

When I first studied various Model A wiring diagrams, I quickly realized they left much to be desired. Sure, the basics were there, but I had questions—lots of them. Which side of the terminal box was the driver's side? Was the red wire on the coil's positive or negative post? Did the yellow wire connect to the charge or discharge side of the ammeter? If I wanted to add turn signals or accessories, where would I tap in? How did the lighting switch work? Those questions were just the start of it. To make matters worse, some of the wiring diagrams found online had mistakes, and some were difficult to follow.

After digging through every resource I could find, I thought I had the lighting circuitry figured out—until I got to the round contact plate inside the light switch body at the bottom of the steering column. I was venturing into the unknown, so before I opened the light switch body, I needed to know what was in there, how it worked, how it was wired, and that it wouldn't fly apart when I released the light switch bail that held it together. Clear diagrams or photos of the contact plate? Practically nonexistent.

The Ford Model A Wiring Diagram: Time for an Update?

by OVRMAFC Member Butch Schultz

There were no drawings available to show how the wires aligned with the keyway (or that there *was* a keyway) and there were no drawings to show what happened inside the light switch body when you flipped the switch at the steering wheel.

Coming from a manufacturing engineering background, I knew these were problems. In my line of work, if the folks in the shop had questions about your drawings, it was a clear sign you hadn't done your job well—and believe me, they took great pleasure in calling us down to the shop floor to explain our work. They were brutal, but usually right. With that experience in mind, I decided to tackle the Model A wiring diagram the same way I approached projects on the job: clarify what was unclear, illustrate what was missing, and refuse to leave out a single detail.

I began by redrawing the wiring diagram most of us know, the one in *Les Andrews' Model A Ford Mechanics Handbook, Vol. I*. Then I added the details I felt were missing, along with a few modern components necessary for today's traffic. Countless trips back and forth to my Model A gave me confidence that the new diagram was complete, clear and correct.

Next, I created a drawing for the contact plate and rotating switch plate. It wasn't until I purchased a new lighting wire harness that I was able to determine the exact connection points of each wire on the contact plate in relation to the keyway. After labeling each wire location on the contact plate, I illustrated how the connections change when you flipped the switch at the steering wheel.

The Ford Model A Wiring Diagram: Time for an Update?

by OVRMAFC Member Butch Schultz

With my Model A rewiring complete and the drawings finished, I am pleased to share them with you on the following pages. I've reviewed them carefully and believe they're accurate. As a bonus, I've included a couple of additional drawings that you might find useful. Because the diagrams are PDF files you can now easily download and save them to your phone or computer for reference when you are working on your Model A. If you have any questions or feedback, please don't hesitate to reach out: schultz4@fuse.net

The drawings include:

- Ford Model A Wiring Diagram with Cowl Lights
- Ford Model A Wiring Diagram without Cowl Lights
- Contact Plate and Wires

As a bonus:

- Fog Lamp Wiring (I think the amber fog lamps look cool on the Model A.)
- Thermal Flasher Wiring (This drawing will clarify the "X", "P" and "L" markings on the turn signal flasher, and what they're for.)

Ford Model A

Wiring Diagram

1928 - 1931 With Cowl Lights

6-Volt
Positive Ground

Ford's original Model A wiring diagram with a few modern options - SEE NOTE 1

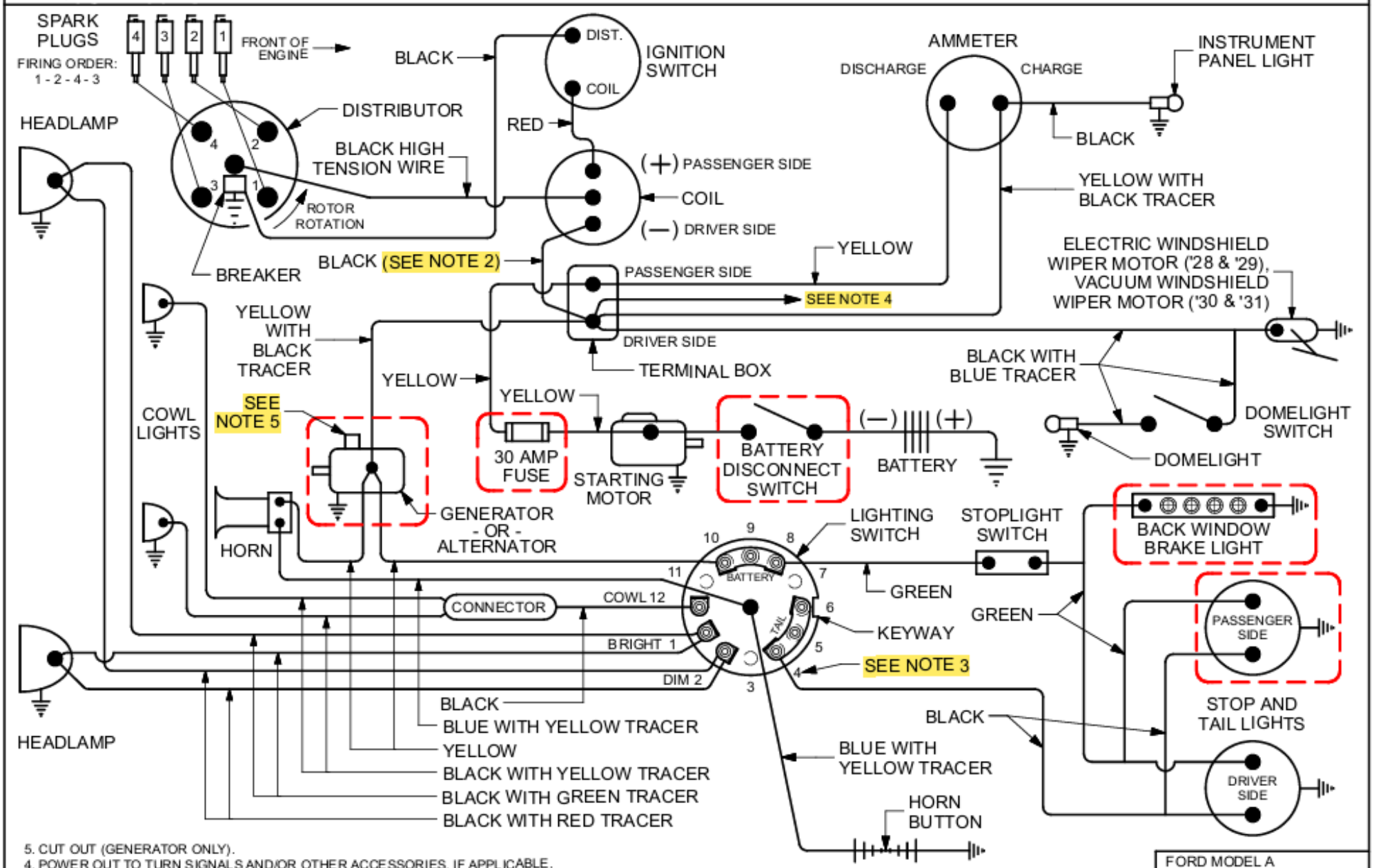

5. CUT OUT (GENERATOR ONLY).
4. POWER OUT TO TURN SIGNALS AND/OR OTHER ACCESSORIES, IF APPLICABLE.
3. SEE "CONTACT PLATE AND WIRES" DRAWING TO REFERENCE NUMBERS AROUND LIGHTING SWITCH.
2. THE FORD MOTOR COMPANY MOVED THIS BLACK WIRE ON THE TERMINAL BOX FROM THE PASSENGER SIDE TO THE DRIVER SIDE IN NOVEMBER 1929.
1. THE ALTERNATOR, 30 AMP FUSE, BATTERY DISCONNECT SWITCH, BACK WINDOW BRAKE LIGHT AND PASSENGER SIDE STOP AND TAIL LIGHTS, ALL ENCLOSED IN THE RED BOXES, ARE ALL MODERN OPTIONS AND NOT ORIGINAL TO THE FORD MODEL A WHEN IT WAS MANUFACTURED. YOUR MODEL A MAY OR MAY NOT HAVE THESE OPTIONS.

NOTES

FORD MODEL A
WIRING DIAGRAM
WITH COWL LIGHTS
BUTCH SCHULTZ
COVINGTON, KY
12/6/2025 SCALE: NONE

R5

Ford Model A

Wiring Diagram

1928 - 1931 Without Cowl Lights

6-Volt
Positive Ground

Ford's original Model A wiring diagram with a few modern options - SEE NOTE 1

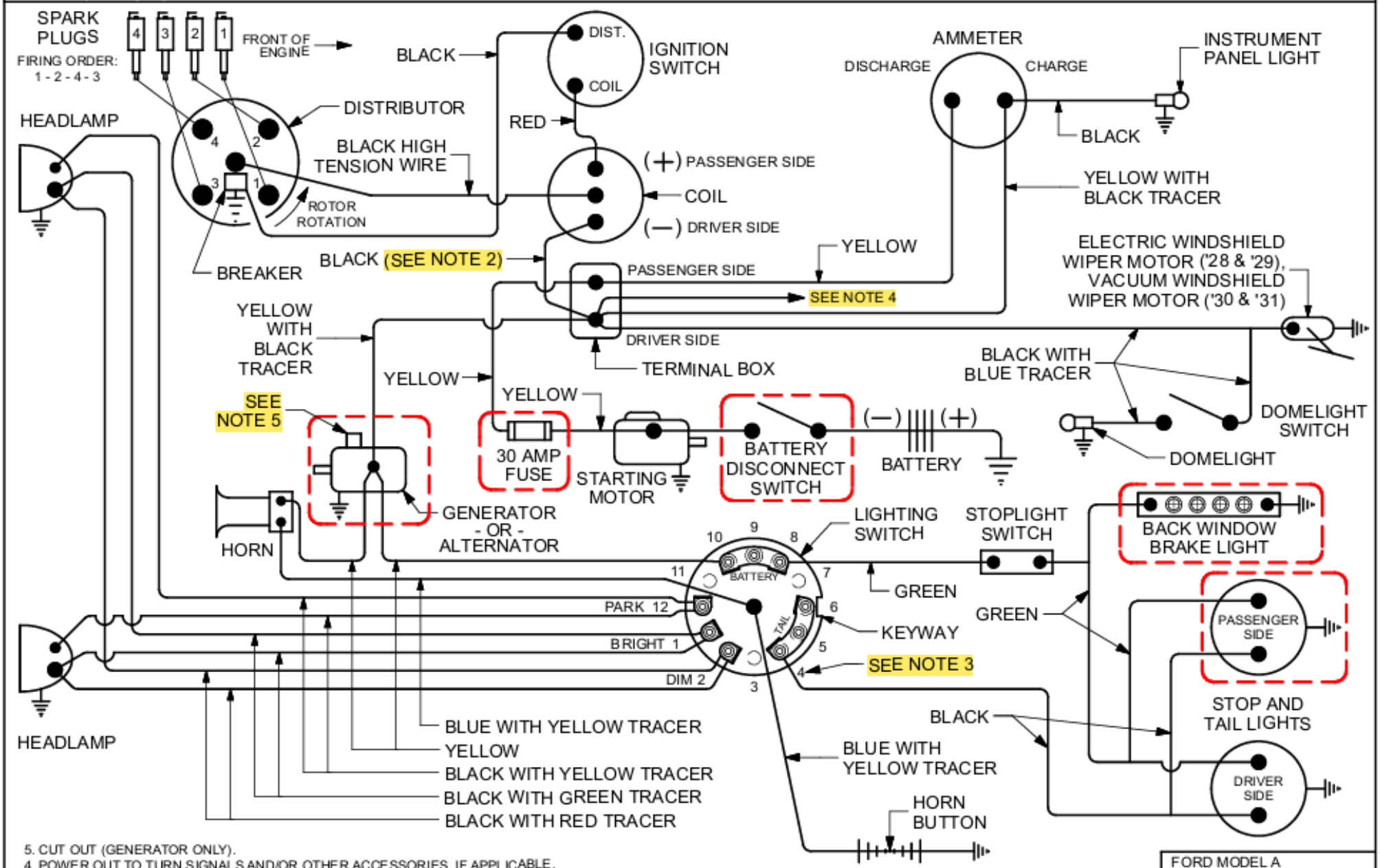

5. CUT OUT (GENERATOR ONLY).
4. POWER OUT TO TURN SIGNALS AND/OR OTHER ACCESSORIES, IF APPLICABLE.
3. SEE "CONTACT PLATE AND WIRES" DRAWING TO REFERENCE NUMBERS AROUND LIGHTING SWITCH.
2. THE FORD MOTOR COMPANY MOVED THIS BLACK WIRE ON THE TERMINAL BOX FROM THE PASSENGER SIDE TO THE DRIVER SIDE IN NOVEMBER 1929.
1. THE ALTERNATOR, 30 AMP FUSE, BATTERY DISCONNECT SWITCH, BACK WINDOW BRAKE LIGHT AND PASSENGER SIDE STOP AND TAIL LIGHTS, ALL ENCLOSED IN THE RED BOXES, ARE ALL MODERN OPTIONS AND NOT ORIGINAL TO THE FORD MODEL A WHEN IT WAS MANUFACTURED. YOUR MODEL A MAY OR MAY NOT HAVE THESE OPTIONS.

NOTES

FORD MODEL A
WIRING DIAGRAM
WITHOUT COWL LIGHTS
BUTCH SCHULTZ
COVINGTON, KY
12/6/2025 SCALE: NONE

R5

Ford Model A

Lighting Contact Plate and Wires
1928 - 1931 With and Without Cowl Lights

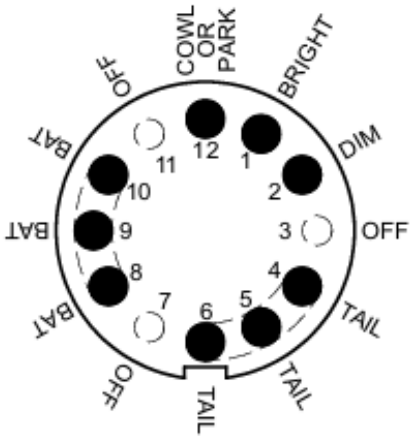

BRASS CONTACTS
ON TOP SIDE
OF CONTACT PLATE
(SEE NOTE 1)

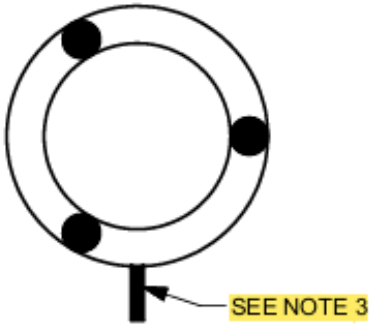

CONTACTS ON ROTATING SWITCH PLATE
(SHOWN IN OFF POSITION)

COWL & TAIL ON
OR
PARK & TAIL ON

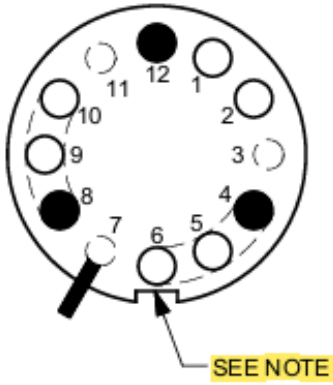

ALL OFF

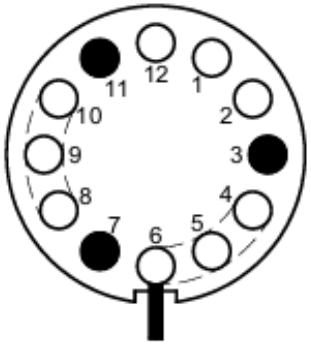

THE FOUR SWITCH POSITIONS
(SEE NOTE 1)

DIM & TAIL ON

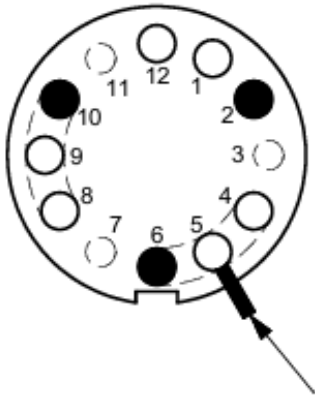

BRIGHT & TAIL ON

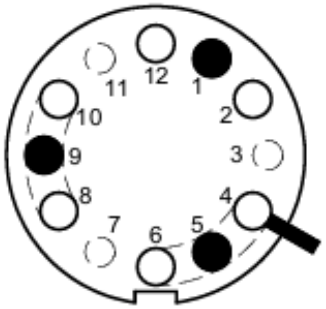

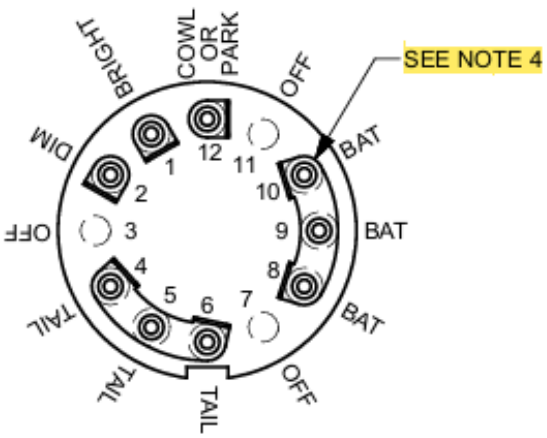

BOTTOM SIDE
OF CONTACT PLATE
(SEE NOTE 2)

WIRE LOCATIONS ON BOTTOM SIDE OF CONTACT PLATE

1 - TWO BLACK WITH GREEN TRACER WIRES TO BRIGHT HEADLIGHTS
2 - TWO BLACK WITH RED TRACER WIRES TO DIM HEADLIGHTS
3 - N/A
4 - ONE BLACK WIRE TO TAIL LIGHT(S)
5 - N/A
6 - N/A
7 - N/A
8 - ONE GREEN WIRE TO STOP LIGHT SWITCH
9 - N/A
10 - ONE YELLOW WIRE TO GENERATOR (OR ALTERNATOR)
11 - N/A
12 - WITH COWL LIGHTS - ONE BLACK WIRE TO COWL LIGHTS WIRE CONNECTOR
- OR -
WITHOUT COWL LIGHTS - TWO BLACK WITH YELLOW TRACER WIRES TO FRONT PARK LIGHTS

5. THIS KEYWAY WILL ORIENT THE CONTACT PLATE IN THE LIGHT SWITCH BODY (A-11655/67) ON A KEY LOCATED AT THE 6 O'CLOCK POSITION.
4. BRASS CONTACTS 4-5-6 AND 8-9-10 ARE CONNECTED TO ONE ANOTHER ON BOTTOM SIDE OF CONTACT PLATE.
3. NOT A COMPONENT OF CONTACT PLATE AND SWITCH PLATE. ILLUSTRATION ONLY TO REPRESENT LIGHT SWITCH LEVER POSITIONS ON STEERING WHEEL.
2. BOTTOM SIDE OF CONTACT PLATE. SHOWN FROM FRONT OF CAR POINT OF VIEW.
1. TOP SIDE OF CONTACT PLATE AND ROTATING SWITCH PLATE. SHOWN FROM STEERING WHEEL POINT OF VIEW.
NOTES

R5

FORD MODEL A
CONTACT PLATE AND WIRES,
LIGHTING WIRE HARNESS
- WITH AND WITHOUT COWL LIGHTS
BUTCH SCHULTZ
COVINGTON, KY 12/5/2025 SCALE: NONE

Ford Model A

Fog Lamps and Wiring
1928 - 1931

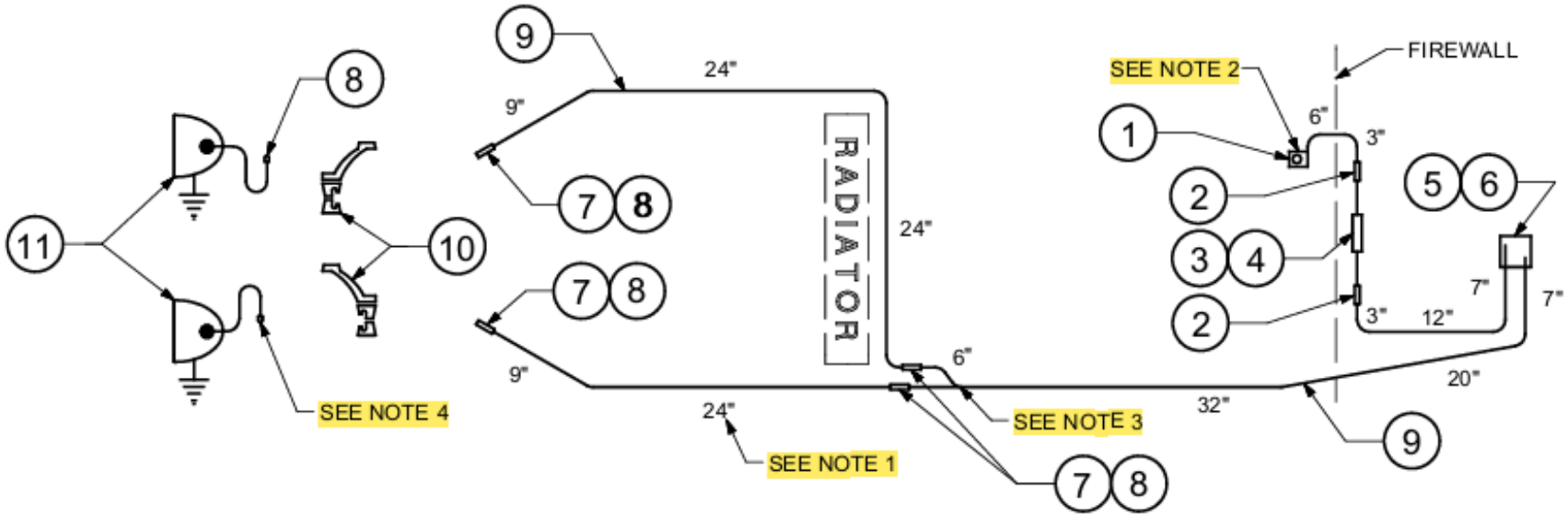

ITEM	QTY	DESCRIPTION	PART NUMBER	SOURCE
11	2	AMBER FOG LAMP, 6-VOLT	A-18105	SNYDER'S
10	2	FOG LIGHT BRACKET	A-18109	SNYDER'S
9	18 FT	WIRE, BLUE, 14 GAUGE	A-14303-B	SNYDER'S
8	8	MALE BULLET END	A-14486	SNYDER'S
7	4	WIRE CONNECTOR	A-14487	SNYDER'S
6	2	RING TERMINAL - GARDNER BENDER 16-14 4-6	15-103	LOWES
5	1	TOGGLE SWITCH - GARDNER BENDER	GSW-11	HOME DEPOT
4	1	FUSE, 20 AMP BUSSMANN	BP/ABC-20	LOWES
3	1	IN-LINE FUSE HOLDER - BUSSMANN	BP-HMK-RP	LOWES
2	2	BUTT SPLICE - GARDNER BENDER 16-14	15-123	HOME DEPOT
1	1	FLAG TERMINAL	A-14464	SNYDER'S

NOTES

1. ALL WIRE LENGTHS SHOWN ARE APPROXIMATE.
2. CONNECT ITEM 1 TO DRIVER'S SIDE IN TERMINAL BOX.
3. SOLDER THESE WIRES TOGETHER. COVER WITH ELECTRICAL TAPE OR HEAT SHRINK TUBING.
4. SOLDER ALL MALE BULLET ENDS TO WIRES.
5. WWW.SNYDERSANTIQUEAUTO.COM

FORD MODEL A
FOG LAMPS AND WIRING
BUTCH SCHULTZ
COVINGTON, KY 12/5/2025 SCALE: NONE

R3

Ford Model A

6-Volt
Positive Ground

Thermal Flasher Wiring
1928 - 1931 With Turn Signals

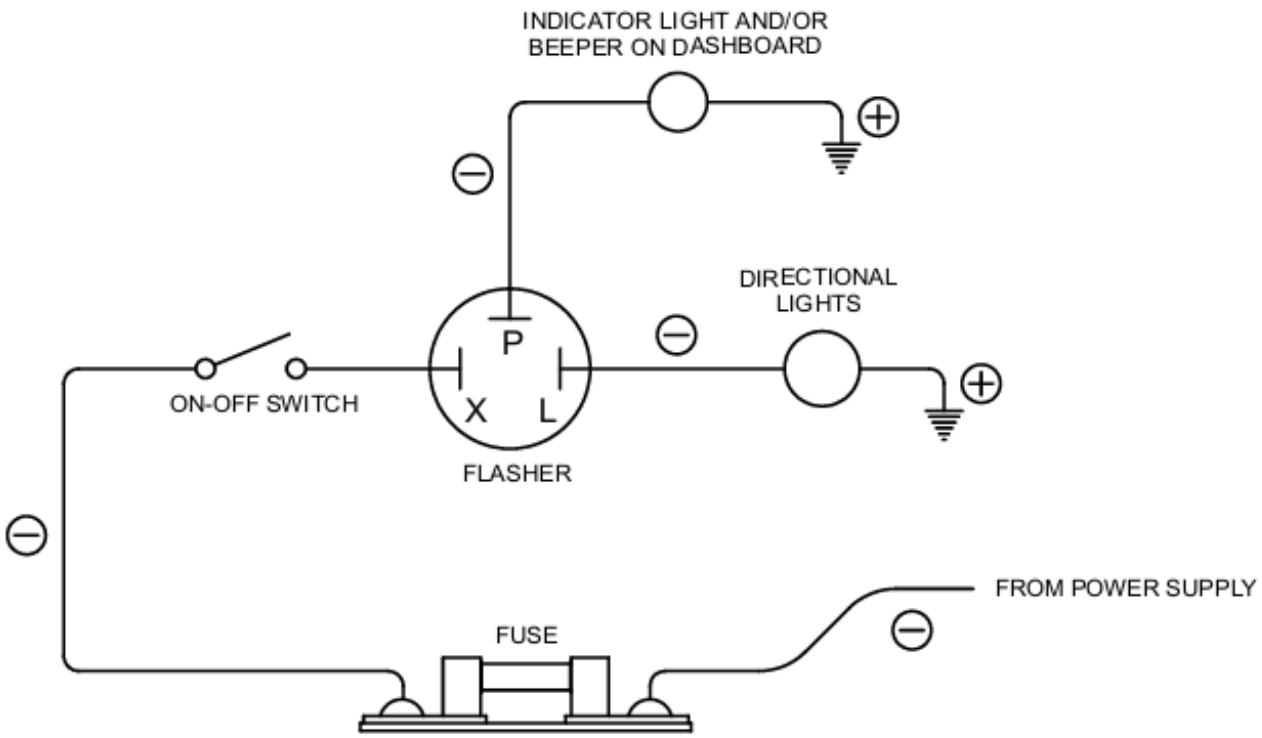

1. THERMAL FLASHER AVAILABLE AT SNYDERSANTIQUEAUTO.COM, PART NUMBER A-13311
NOTES

R3

FORD MODEL A
THERMAL FLASHER WIRING
6-VOLT, POSITIVE GROUND
BUTCH SCHULTZ
COVINGTON, KY 12/6/2025 SCALE: NONE